BENITO –Urban

Alta seguridad

HS1200

T +34 938 521 000
www.benito.com

Total height	1200 mm
Pylon diameter	Ø220 mm
Thickness	4 mm
Material and finish	Inox A304 satin
Excavation depth	300 mm
Reflective band	Optional
Led Crown	Optional

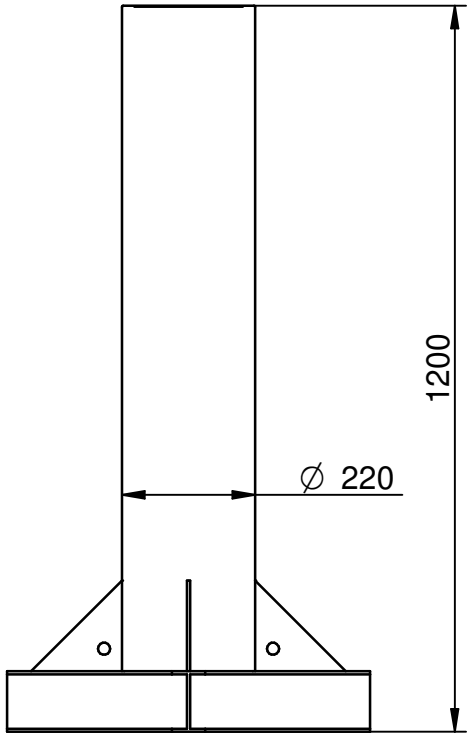

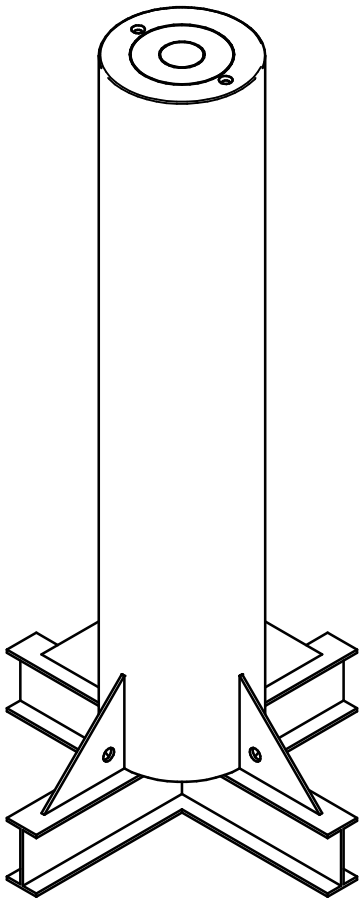

V 01 29/09/2021